Mulberry™

*Cast a warm eye on life*

# STOKER

Multi Fuel Insert Convection and Radiant Stove

Installation & Operation Instructions

It is essential for Safe operation of this heating appliance that the instructions set out in this book are followed.

Please keep this book such that it is available to any user of the STOKER insert stove.

ENJOY YOUR STOVE -- SAFELY

Quality Irish Stoves, Rathpatrick, Slieverue, Co. Kilkenny, Via Waterford Ireland.
Telephone. +353 (0)51 897415: Fax. +353 (0)51 897451
www.mulberrystoves.com Email. info@mulberrystoves.com

 

# MULBERRY Stoker Multi-Fuel Insert stove

## *Getting Started*

Congratulations on your purchase of this quality Mulberry stove. With proper preparation, installation and use this product will provide a lifetime of warmth.

## Unpacking the stove

Step 1:
Remove the carton and protective packaging leaving the stove lying on the pallet. Carefully open the door of the stove and remove the following contents from the stove.

- High Chrome Cast Iron parts -5 castings
    - Right side plate (12)
    - Left side plate (14)
    - Back plate (6)
    - Grate (7)
    - Firefence (11)
- Ashpan (13)
- Operating tool (15)
- 2 of M8 x 200mm threaded rods with fixing screws and clamping brackets (8,9 and 10)
- Flue restrictor plate (1)
- Bag containing
    - Anchor Bolt (2)
    - Door handle assembly consisting of
        - Timber handle (3)
        - 8mm countersunk screw (4)
        - Spring washer (5)

Fig 1 below shows the contents of the packaging of your new Mulberry Stove.

 

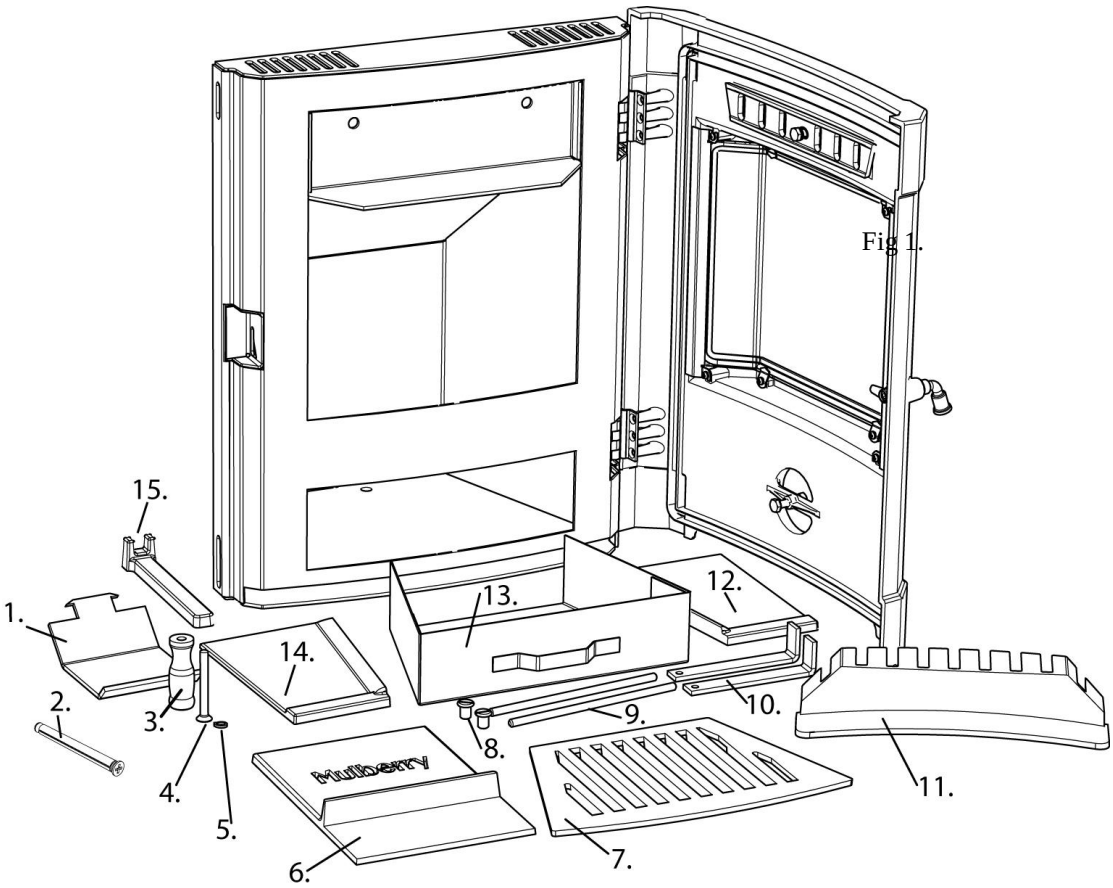


Fig 1.

Step 2:

Carefully re-close the door and lift the Stove off the pallet and place upright as indicated below.

Open the small plastic bag. Remove the door handle and screw. Position the spring washer onto the screw and insert the screw into the handle. Screw handle to spigot on stove door as shown in Fig. 2.

Fig 2.

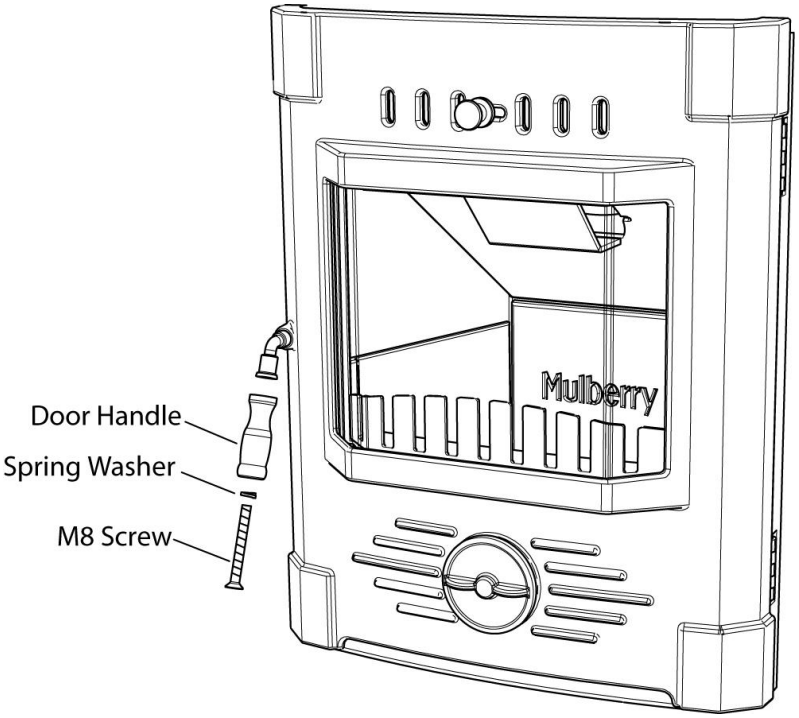


Step 3:

 

Your stove is factory fitted with a fibre rope seal around the back of the stove. Make sure that the fibre rope is fitted as per the illustration below, Fig 3.

Fig 3.

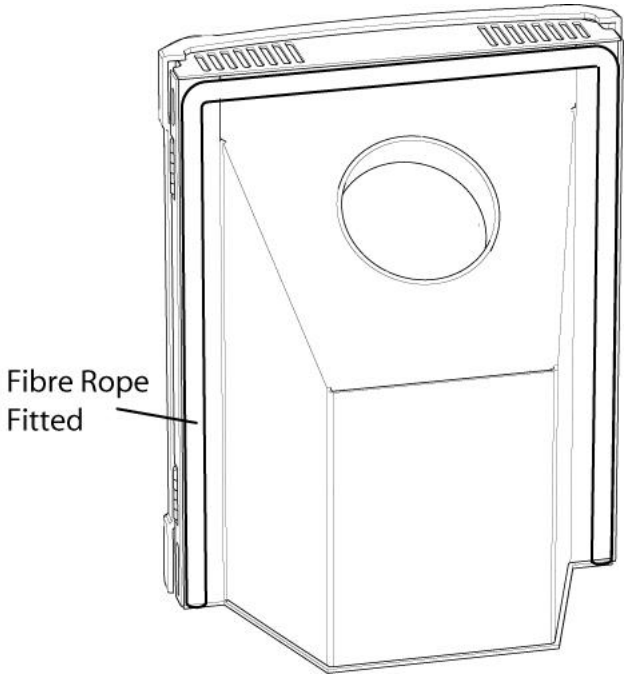


Step 4: **Only applies if the stove is being connected to a Solid Fuel flexible chimney liner rated to EN 1856. <u>If a flexible flue liner is to be used the fireback must be removed.</u>**

Attach a stainless steel connector to the end of the flue liner hanging down in the chimney. It is essential that the flexible flue liner on this appliance is of Solid Fuel Rating to EN 1856. It is also essential that a Mulberry flexible flue connector is used that has been designed for use specifically with a Stoker Insert stove. The connector should be securely fixed to the flexible flue liner using the 3 stainless steel screws provided and when fixed the screw holes should be horizontal as shown in Fig. 4.

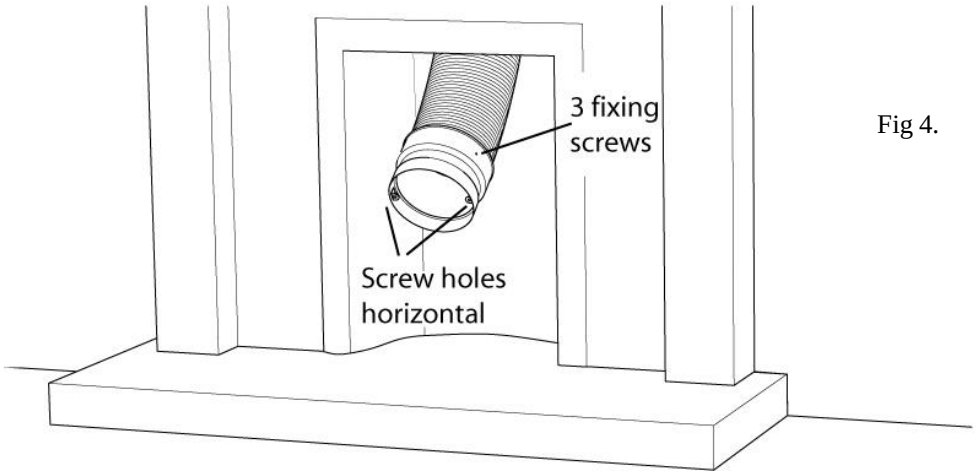


Fig 4.

Step 5:

It is vital that a totally airtight seal exists between the stove and the fireplace. Any unevenness in the facing of the fireplace, e.g. stone, brick, or rough granite, should be levelled with a skim of fire cement such that a smooth area exists at least 50mm around the opening as shown in Fig 5a. This ensures that the fibre rope is compressing against a smooth surface.

 

Make sure that the fireplace opening intended for the stove is free from all debris and is level. Place the stove in position on the hearth and push back into the fireplace opening. Push firmly to compress the fibre rope against the fireplace as shown in Fig 5b.

Fig 5a.

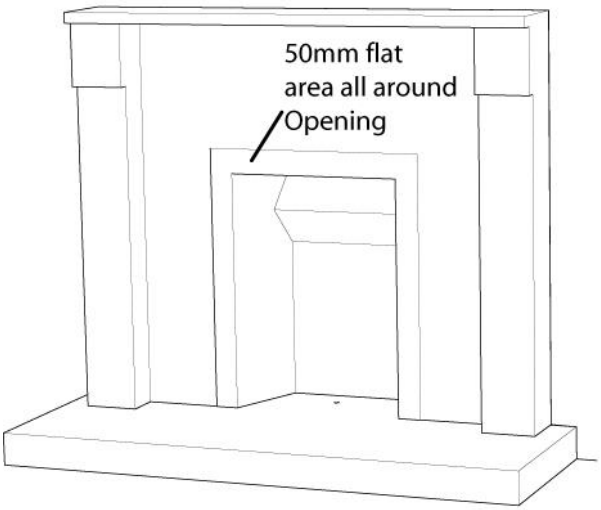


Fig 5b.

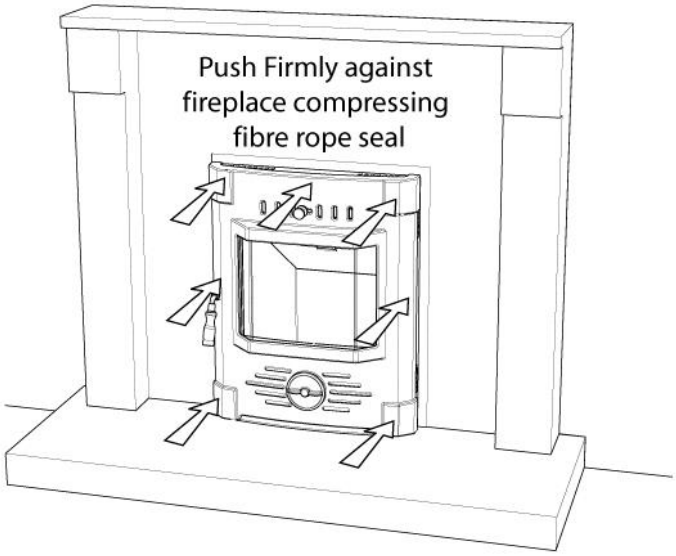


Step 6:

When the Insert stove is in this position in the fireplace, open the door, locate the hole for the base fixing screw in the base of the stove and use a pencil or marker to mark the position for the anchor bolt that secures the unit in position. See Fig 6a.

Remove the Insert stove and using a 10mm masonry drill, drill a hole in the floor of the fireplace opening at the marked point to a depth of 60mm. See Fig 6b.

Replace the stove into the fireplace as shown in Fig 6c.

Fit the Anchor bolt through the hole in the base and screw tight fixing the insert firmly into position. Fig 6d.

 

Fig 6a.

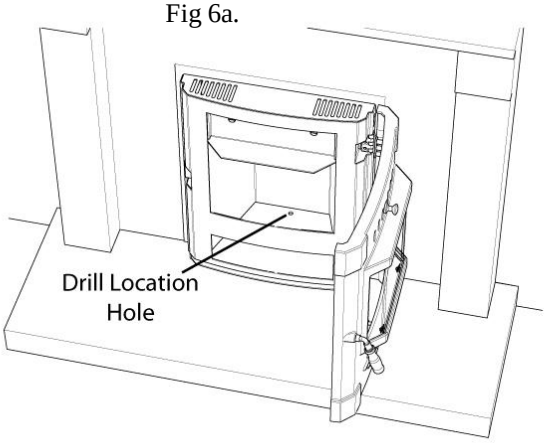


Fig 6b.

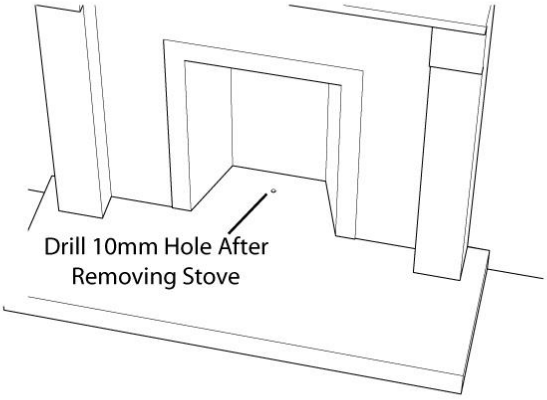


Fig 6c

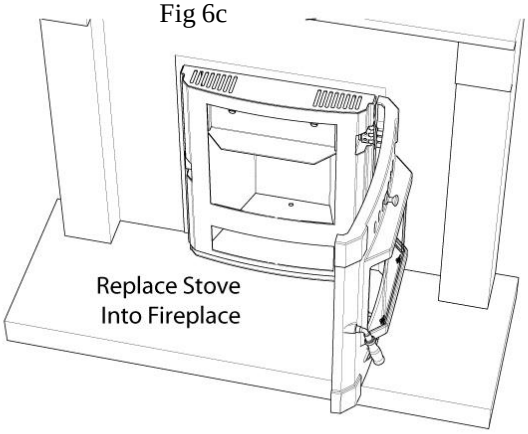


Fig 6d.

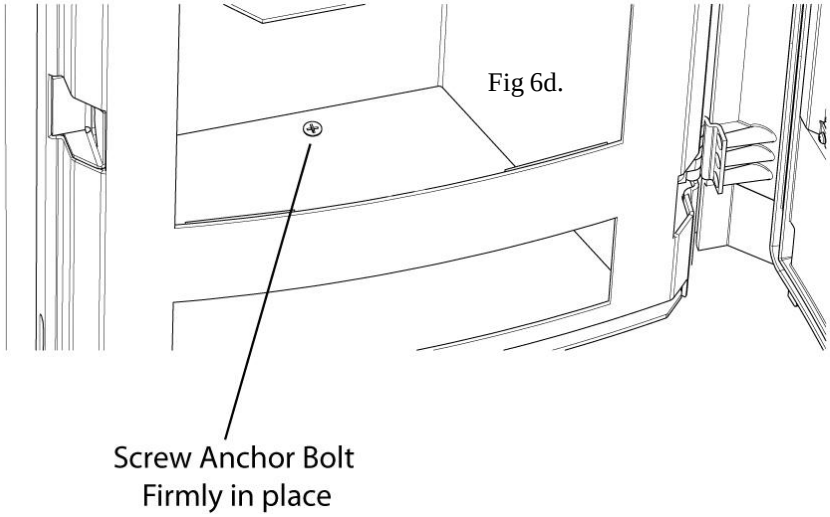


 

Step 7:
Fit all the internal components in the correct order as shown in Fig 7.

Fig 7.

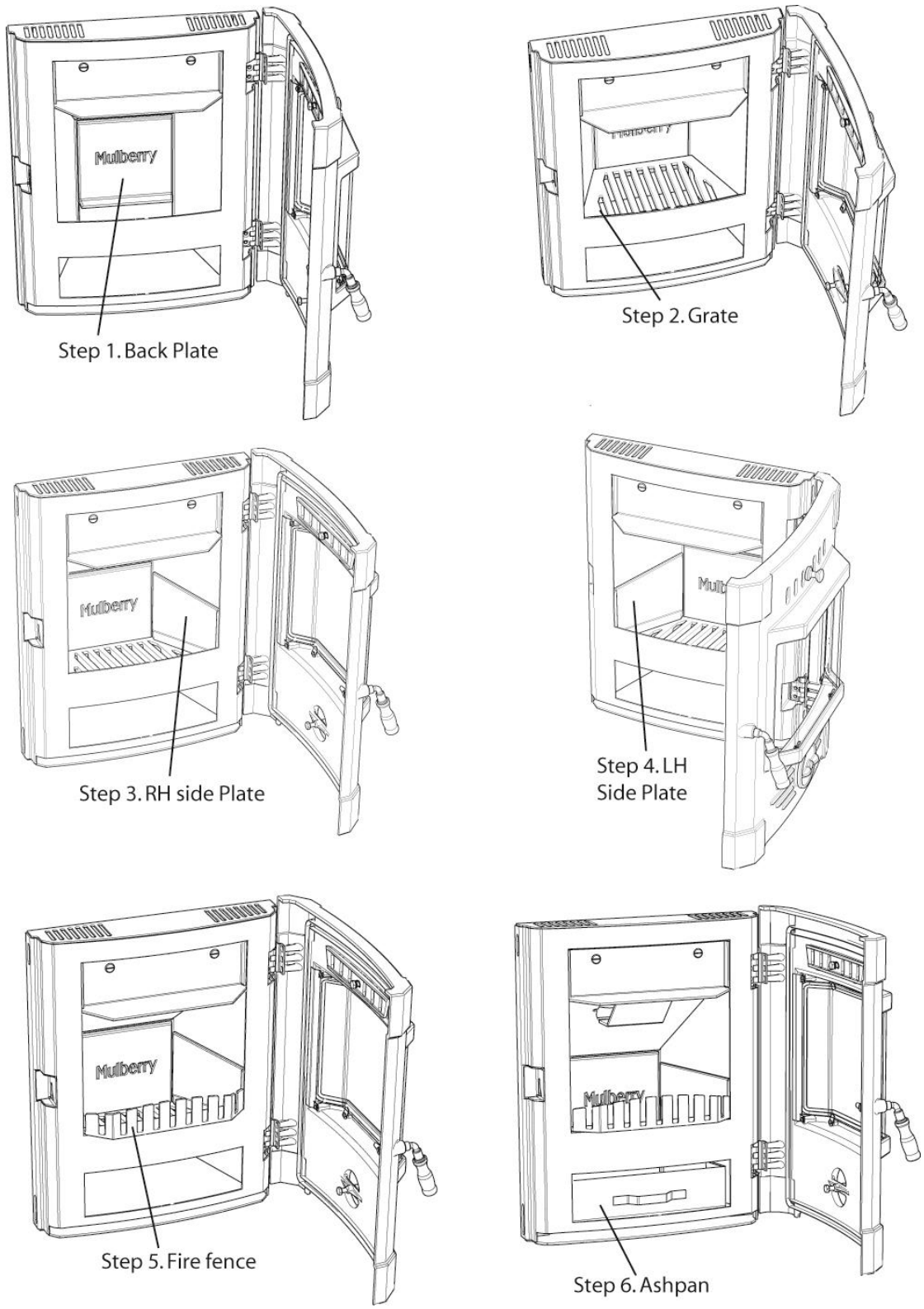


 

Step8:
Put your hand into the chimney through the stove flue outlet and hold the right hand clamping bracket in the vertical position. With this held vertical adjust the front fixing screw on the front of the stove to tighten the clamping bracket onto the fireplace lintel thus pulling the stove against the fireplace. (If the threaded rods connecting the clamping brackets to the clamping screws are too long they can be shortened using a hacksaw. If they are too short, two longer lengths of M8 threaded rod may be obtained from a hardware shop.) Repeat this operation for the left hand clamping bracket. When both have been tightened the stove should be very firmly held against the fireplace. See Figs .8a and 8b.

Fig 8a.

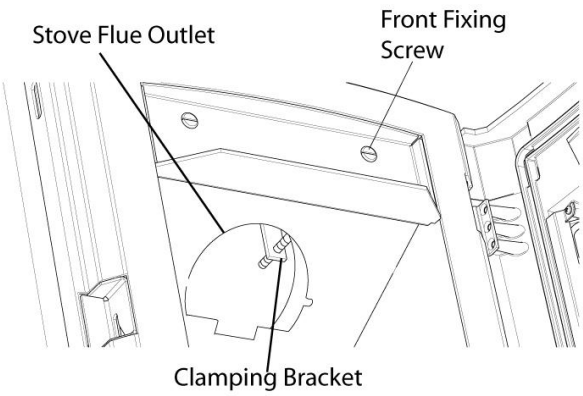


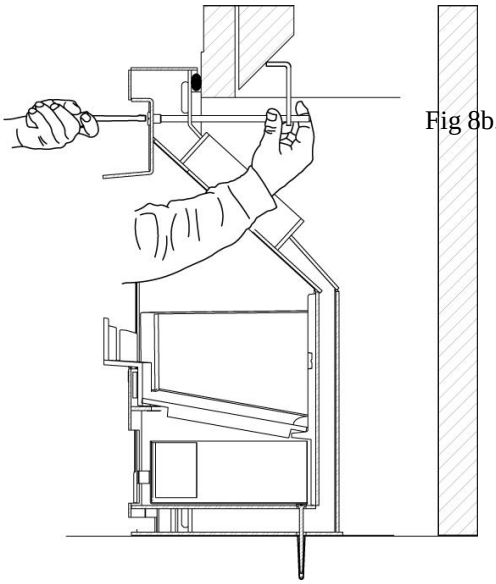

Fig 8b.

Step 9:
a) If a flexible flue liner is being used-

Reach up through the stove flue outlet and grasp the connector attached to the flue liner. Pull this down and rotate until the two screw holes in the connector line up with the holes in the flue outlet, Fig. 9a

Insert and tighten the two screws supplied as shown in Fig 9b.

Fig 9a.

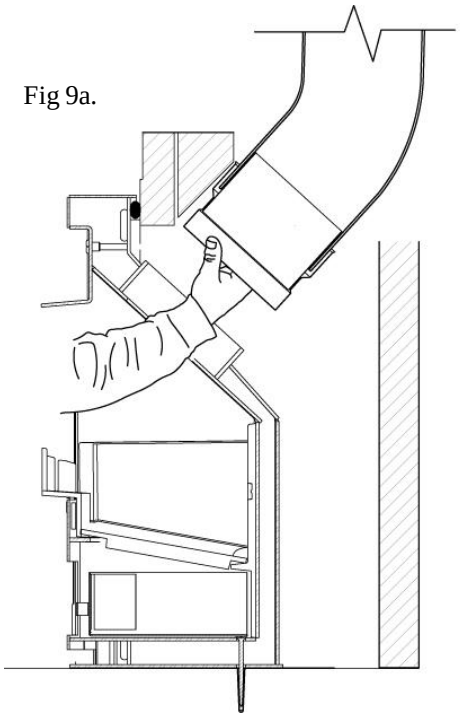

Fig 9b.

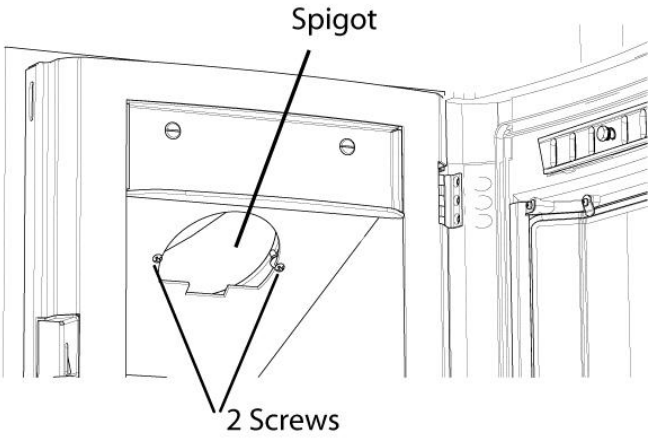


 

b) If a flexible flue liner is not being used-
While it is not necessary to fill any gaps at the back and sides between the appliance and the fireback, since there is no danger if soot accumulates there, a marginal improvement in appliance efficiency may be achieved by filling these spaces with fire cement, vermiculite beads, rock wool, or masonry rubble. See Fig. 9c

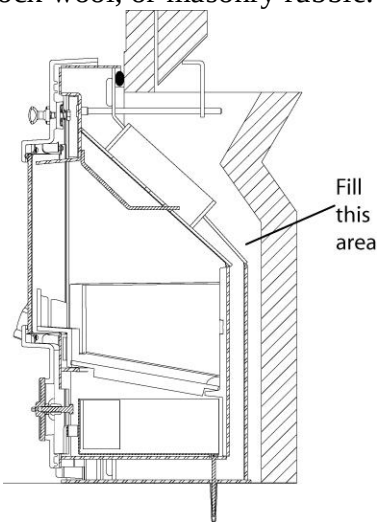


Fig 9c.

Step 10:
Open the door and fit the throat plate as shown in Fig 10.

Fig 11. below shows how your installation should look depending on whether you used the optional stainless steel flexible flue adapter. Please look over the drawings carefully to make sure the installation has been carried out in accordance with the instructions. This will ensure you can enjoy many years of warmth from your Mulberry Stoker Stove.

Fig 10.

Fig 11.

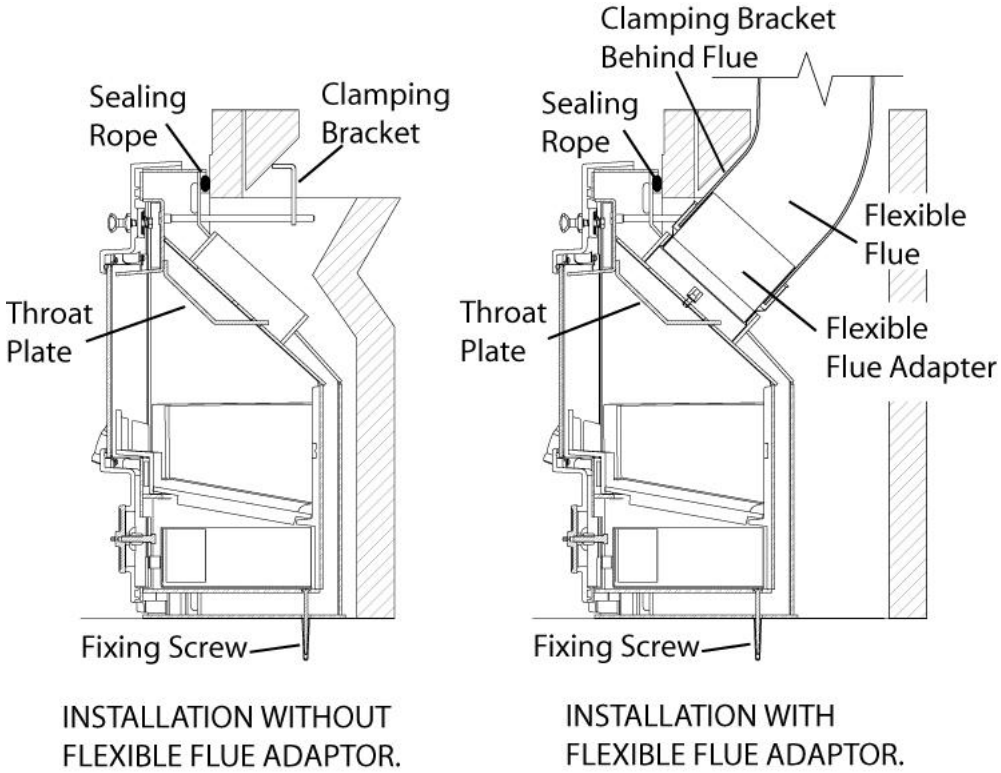


 

# Congratulations! Your Mulberry Stoker Stove is now Installed and ready for use!

## *Plan Ahead*

Read these Instructions carefully before Installing your Stoker Stove. Failure to do so may result in personal injury and / or property damage.
All local regulations, including those referring to national and European standards need to be complied with when installing the Stoker Stove.

A safe insert stove installation involves several elements, including –

- ventilation and combustion air
- the chimney
- the connection between the appliance and chimney
- protection of combustible materials in the vicinity of the stove
- full compliance with local Building Regulations

Each of these elements is equally important for a safe stove installation.

## VENTILATION & COMBUSTION AIR REQUIREMENTS

Over and above local Building Regulations, provision for outside combustion air may be necessary to ensure that fuel-burning appliances do not discharge products of combustion into the house. Building Regulations Guidelines to determine the need for combustion air may not be adequate for every situation. Whether required by the local Building Regulations or not, it is advisable to provide permanent ventilation to outside air supply in any room where a stove is situated.
Outside combustion air is particularly required if --

- The solid-fuel-fired appliance does not draw steadily, smoke rollout occurs, fuels burn poorly, or back-draughts occur whether or not there is combustion present.
- Existing fuel-fired equipment in the house, such as fireplaces or other heating appliances, smell, do not operate properly, suffer smoke roll-out when opened, or back-draught whether or not there is combustion present.
- Opening a window slightly on a calm (windless) day alleviates any of the above symptoms.
- The house is equipped with a well-sealed vapour barrier and tight fitting windows and/or has any powered devices that exhaust house air.
- There is excessive condensation on windows in the winter.
- A ventilation system is installed in the house.

If these, or other indications, suggest that infiltration air is inadequate, additional combustion air should be provided from the outdoors. Outside combustion air can be provided to the stove using either an Indirect Method, or a Mechanical Ventilation System as described below –

- Indirect method--
    - for an appliance not certified for direct connection of outside combustion air, the outside air is vented into the room at a point no closer than 300mm from the appliance, to avoid affecting the performance of the stove.
- Mechanical ventilation system  such as air change or heat recovery –
    - The ventilation system may be able to provide sufficient combustion make-up air for the solid-fuel-fired appliance.
    - The ventilation system might need to be re-balanced by a ventilation technician after installation of the appliance.

 

**IMPORTANT:** Whatever method is used to provide enough combustion air into the room for safe operation of the Stove, it is very important that all air vents in the room are positioned so that they are not liable to blockage during normal use.

## Chimney

The STOKER Insert stove is designed for installation in standard Irish or British fireplace openings conforming to BS1251 & BS8303

Remember that it is the chimney that makes the stove work, not the stove that makes the chimney work. This is because a chimney actually creates suction, called draught, which pulls air through the stove.

Several factors affect draught, particularly –

- Height,
    - a minimum chimney height of 4.57 metres from the floor on which the stove is installed is required for the STOKER
- Cross-sectional area,
    - The chimney for the STOKER must have a cross-sectional area of at least 0.018m2 (150mm diameter)
- Temperature of the chimney, as well as
- Proximity of surrounding trees or buildings.

Masonry Chimneys

Prior to installing the STOKER, you should have your chimney cleaned and inspected, and, if necessary, repaired by a competent chimney sweep or relined, using an approved relining system.

Please note that --

- No other appliance can be vented into the same flue.
- A chimney must be the required height above the roof or other obstruction for safety and for proper draught operation. The requirement is that the chimney must at least 76mm higher than the highest point where it passes through the roof and at least 50mm higher than the highest part of the roof or structure that is within 255mm of the chimney, measured horizontally
- Chimneys shorter than 4.57 metres may not provide adequate draught. This could result in smoke spilling into the room from the door or joints in the stove. In addition, inadequate draught can cause puffing.
- A too-strong draught causes excessive temperatures and can shorten burn times.
- Excessive draughts can be corrected by having your dealer install a barometric damper at 2.54mm of water column.
- If you suspect you have draught problems, consult your dealer.

Chimney Cleaning

When inspecting a masonry chimney, start at the clean-out door, normally found in the basement, at the base of the chimney, or on the outside. If the chimney does not have a clean-out door it must be inspected and cleaned by removing the stove from chimney.

IMPORTANT: **After a prolonged shutdown period it is essential to check the appliance and Chimney to make sure that there is no blockages that may impair the performance and function of the Stove.**

 

## Protection of Combustibles

Clearances to Combustibles
A combustible is anything that can burn, and in the case of stove installations, these combustibles may not be visible. If you are not sure of the combustible nature of any material in the vicinity of your planned stove installation, you should check with your local fire officials. Remember that "fire resistant" materials are considered combustible; they are difficult to ignite, but they will burn.

Installation clearances for the STOKER Insert Stove. See Fig. 12.
Maintain at least the following clearance to all combustible materials.

| | |
|---|---|
| From the Top | 550mm |
| From the Front and Sides | 100mm |

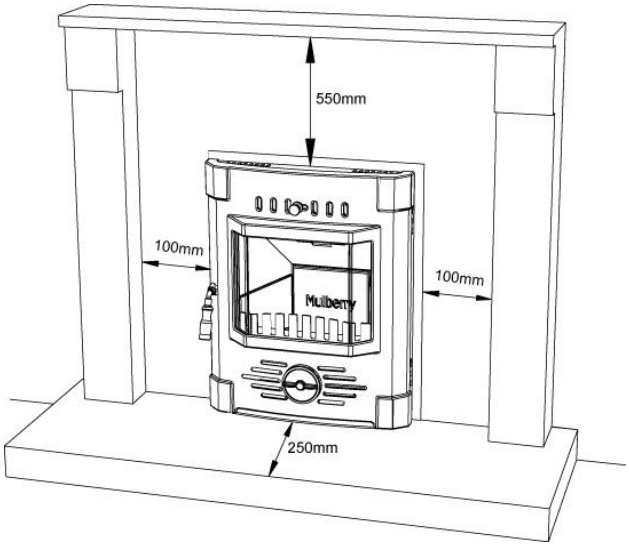


Fig 12.

**CAUTION:** The STOKER Insert stove becomes extremely hot in operation. Convection air from the grilles at the top and sides can reach 350$^0$C. These grilles must always be kept clear. A fire-guard should be used if children, the elderly, or infirm are present. Flammable materials should not be stored near the appliance.

**CAUTION:** If you have recently purchased a home that has a stove hearth in it that you plan to use, it is extremely important that the entire system be examined for safety. Many older homes may have faulty chimneys, or previous owners may have covered combustible walls or studs with brick veneers. Heat is conducted readily through brick and could ignite unseen combustibles behind it.
Contact local building or fire official about restrictions and installation requirements in your area

Floor Protection
The STOKER Insert stove must be placed on a **non-combustible surface** at least 75mm thick that extends at least 200mm beyond the sides and 250mm beyond the front of the stove with no obstructions that might prevent the door being opened. This is the minimum floor protector size.
All floor protection materials must be non-combustible (i.e., metals, brick, stone, mineral fibre boards, etc.). Organic materials such as plastics, wood, paper products, and so forth are combustible and must not be used.

 

Mulberry granite stove plinths that are purpose designed to protect your floor and provide an attractive setting for your stove are available from your Mulberry stockist. They are available in 2 ft x 2 ft (610mm x 610mm), and 3 ft x 2 ft (910mm x 610mm).

**WARNING:** **Never** put any type of floor protection on top of carpeting.

## *Operation*

Before building a fire in your new insert stove, please read the following section carefully.

The STOKER insert stove is designed to burn solid fuels. Stove outputs obviously relate to the calorific value of the fuel being burned. When burning wood, higher efficiencies and lower emissions generally result when burning air-dried seasoned hardwoods, as compared to softwoods or to green or freshly cut hardwoods.

Your Mulberry Stoker Stove is designed to be used with only the recommended fuels. The amount of fuel recommended is 1 to 3 Kg of mineral fuel and 1kg of timber per refuelling.

Do not over-fire your Stoker Stove. Over-firing will damage a painted or enamel finish. When loading fuel into your Stoker Stove it is very important that you do not build a fire that extends beyond the cast-iron side plates. This is illustrated in Fig 13.

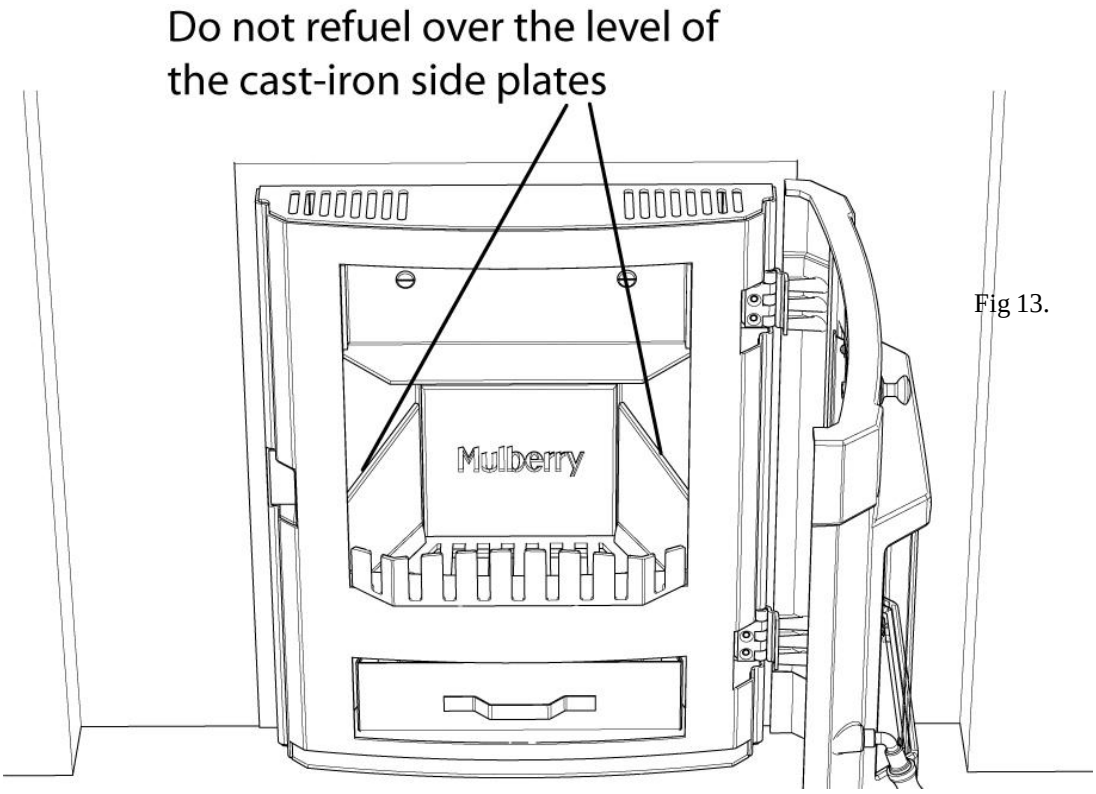


Fig 13.

The approximate calorific values of various fuels are -

| | |
|---|---|
| Anthracite | 8.2 kW/Kg |
| House coal | 7.2 kW/Kg |
| Wood (dry) | 5.0 kW/Kg |
| Peat Briquettes | 4.8 kW/Kg |
| Bog peat | 3.4 kW/Kg |

 

**Do not burn:**
• Household rubbish
• Cardboard
• Treated or painted Wood Solvents
• Treated or painted Wood
• Chemical Chimney Cleaners
• Coloured Paper
• Any synthetic fuel or logs that have not been approved for wood stoves.

Burning treated wood, rubbish, solvents, coloured paper, chemical chimney cleaners, or trash may result in release of toxic fumes and may cause the stove to overheat. Never use gasoline, gasoline-type lantern fuel, kerosene, charcoal lighter fluid, or similar liquids to start or "freshen up" a fire in this stove. Keep all such liquids far away from the heater while it is in use.

If ever a chimney fire is suspected, immediately close the draught regulator and make sure the stove door is closed. Call the fire service and get everyone safely out of the house. Trying to extinguish the fire in the stove will not help. In fact it can make the matter worse by allowing oxygen through the door, which then supports the fire in the chimney. When the roaring and crackling has stopped, resist the temptation to open the door and look at the fire. The fire may have suffocated, but could rekindle when the door is opened. After a chimney fire, do not use the stove until the chimney and the flue pipe have been cleaned and inspected to ensure that no damage has been sustained.

Breaking-in your new stove
A cast iron stove should be "broken in" gradually. Five consecutive small fires should be built in the stove prior to operating the stove continuously. Each fire should be a little larger than the previous one, and the last fire should be a full-sized load. Allow the stove to cool completely between fires.
It is normal for new painted stoves to emit a smell or even some smoke during the first few fires. The seasoning of the high temperature paint causes this, and the odour will diminish with each fire and eventually disappear. Opening a window or door near the stove will help provide additional ventilation and reduce the odour.

## Seasonal use.

Operation of the Stoker controls can vary during different times of the year. Causes of this can be high winds and / or adverse weather conditions. During high winds the characteristics of your chimney flue can vary significantly from that when your Stove was installed. Severe up and down draughts may be experienced.

Please be aware that in the case of a severe up-draught you will need to shut down the air control settings more than usual to maintain the level of fuel burning that you are accustomed to.

Please be aware that in the case of severe down-draughts, the wind may wind to blow directly down your chimney. In this case a suitable anti down-draught terminal or cowl may have to be fitted.

Unfortunately, neither of the above can be ascertained when installing and commissioning the Stove if the conditions are not present on Installation.

 

## Controls

Primary Air control

The primary combustion air for the stove is controlled by a "spin valve" located at the bottom of the stove door. See Fig. 13. Turning this valve to the left, (anti clockwise), increases the air supply and thus the burn rate. Turning the spin valve to the right, (clockwise), closes off the air supply and reduces the burn rate. Adjusting this spin valve will give desired level of heat from the stove by controlling the amount of air entering the firebox. This should be fully opened when lighting the stove and adjusted to the required position when the stove is burning normally.

Secondary Air control

The secondary air supply to the stove is controlled by a "slide" located above the door. See Fig. 14. Secondary air initially is relatively cold and passes down the door glass keeping it clean. This air is then directed into the fire increasing combustion and creating turbulence that causes secondary burning of particulates thus reducing emissions from the stove up the chimney. Moving the slide to the left increases the supply of secondary air while moving it to the right reduces the supply.

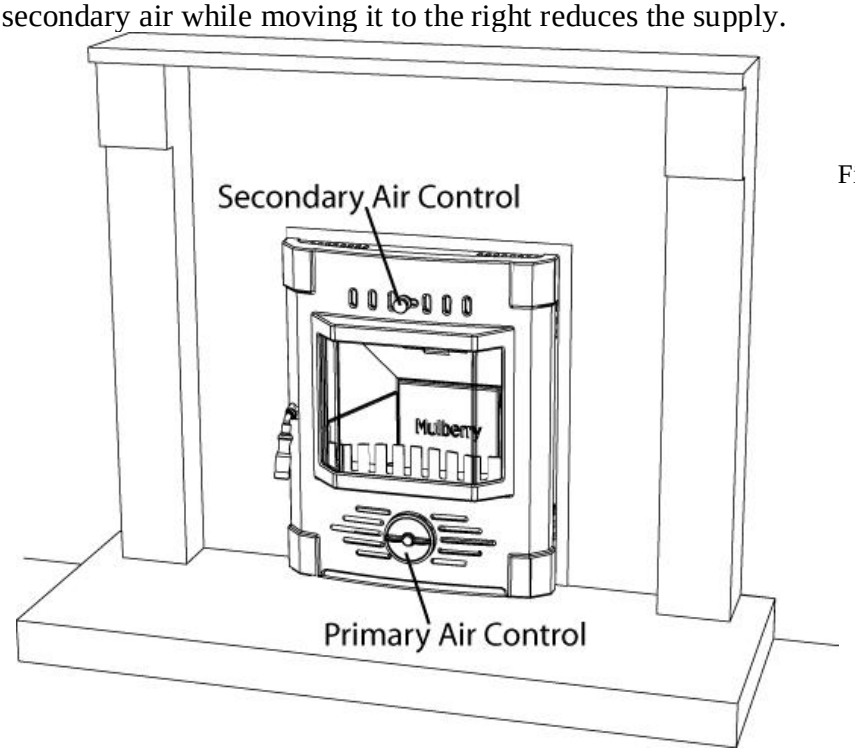


Fig 14.

Overnight burning

The use of the above primary and secondary air controls are a critical part of keeping a fire in overnight if that is desired. Firstly, there must be enough fuel in the firebox to sustain an all-night burn. Then, the amount of air entering the firebox must be kept at an absolute minimum. The spin valve should be closed fully and the secondary air slide should be moved to a setting where the fire is barely glowing. Trial and error will determine the setting for your own particular chimney draught.

**WARNING**: It is essential that the chimney is clean and in good condition before overnight burning is attempted as a shutting down of the air supply on the stove is requiring the chimney to fully dispel the products of combustion such as carbon monoxide.

 

## Starting a good fire

• Make sure the spin valve air draught control and secondary air slide are fully open to promote maximum burn. Open the door and cover the grate of the stove with tightly crushed newspaper. Criss-cross a generous amount of firelighters or dry kindling, such as split pieces of scrap timber, on top of the paper. Place a small amount of fuel such as 1 or 2 dry split logs, or 3 or 4 peat briquettes, or a few pieces of coal or turf, on top of the firelighters or kindling.
• Light the paper evenly across the front and close the door.
• When the initial pieces of fuel are burning healthily, continue to add fuel until a healthy bed of glowing embers has formed to the desired size.
• Allow this to burn for several minutes. Once the stove is burning well, adjust the air control to the desired heat output level. Avoid operating the stove with the air control closed completely.
• In order for secondary combustion to occur, the fire must be well established with temperatures above 600°C in the firebox.
• If the fire dies out, this cause is most likely either an insufficient bed of fully burning fuel, reducing the air supply too soon, or using damp logs as fuel.

Benefits of a Good Fire

A good fire will efficiently utilize your fuel, keep emissions and chimney build-up to an absolute minimum, require less work, and be predictable.

Reloading

Reload the stove while it is still hot and there is adequate heat to ignite the fresh fuel load. It is a good idea to include a smaller piece or two of fuel at the base of the new load to help the stove recover more quickly to its operating temperature.

Reloading Procedure

• Always wear gloves when tending the stove.
• Move the air control spin valve and secondary air slide to the fully open position.
• Wait a few seconds and open the door.
• Use a stove shovel or similar tool to break up any remaining embers and to move some live embers toward the front where combustion air enters.
• Load the fuel (Smaller pieces first).
• Close the door.
• Wait 5-10 minutes and adjust the air control to desired setting.

Ash Removal

- When ash builds up on the grate use a poker to disturb the fuel bed and clear a path for air. This will move the ash off the grate and into the ash pan located under the firebox.
- The ash pan will need to be emptied regularly during operation. If ash is allowed to build up in the ash pan to the point where the ash is touching the underside of the grate, the flow of cool air underneath the grate will be reduced and the life of the grate shortened.
- When removing ash from a stove that is in operation it is always a good idea to wear heavy protective gloves while removing and disposing of the ashes.
- Ashes should be placed in a metal container used exclusively for ashes, with a tight fitting lid. The closed container of ashes should be placed outdoors, well away from all combustible materials, pending final disposal. If ashes are disposed of by burying in soil or otherwise dispersed, they should be retained in the closed container until all cinders have thoroughly cooled.
- Overfiring will result if the stove is operated with the door open. This could cause damage to the stove, void the warranty and/or lead to a house fire.

 

- **WARNING:** Operate the Mulberry Stoker stove only with the door fully closed. Keep the door fully closed except when loading fuel or removing ashes. A partially open door may result in over firing.

## *Maintenance*

At least once a year, perform a routine maintenance check. A good time to do this is when the chimney and the flue pipe are being cleaned. The chimney and flue pipe should be cleaned whenever accumulations of soot and creosote reach 6mm thick, which may be several times a year, depending on how the stove is operated. Thoroughly clean the stove. Brush all ash and soot out of the stove. It is better to brush out the ash and soot than to vacuum it out because soot particles are small enough to pass through most vacuum bags. In a dark room, use a strong light to inspect the stove inside and out for cracks or leaks at corners and joints. Cracked parts should be replaced. Leaks at joints can be patched with stove furnace cement. Check the door gasket for tightness. (See Fig 15. ). To do this, put a strip of printer or copier paper halfway into the stove, close and latch the door, and try pulling the paper out. If it can be removed easily the, seal is too loose. Check several spots around the door. To replace the gasket, scrape out all old gasket material and gasket cement. Spread a 3mm bead of stove cement into the bottom of the groove and press in new gasket. Fire cement and gasket material may be obtained from your local Mulberry dealer.

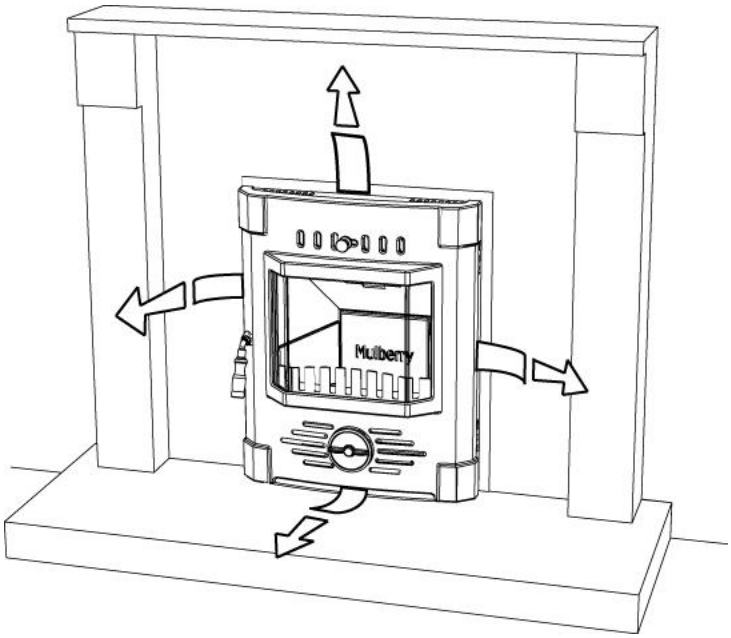


Fig 15.

 

## *Replacement Parts*

Replacement parts for the Mulberry Stoker can be ordered through your local authorised Mulberry dealer. Use only genuine Mulberry Stoker parts for all maintenance and repairs.

**UNDER NO CIRCUMSTANCES SHOULD ANY MODIFICATIONS BE MADE TO THE MULBERRY STOKER STOVE WHICH CHANGES THE STOVE IN ANY WAY, AESTHETICALLY OR FUNCTIONALLY FROM THE MANUFACTURER'S ORIGINAL SPECIFICATION. MODIFICATIONS TO THE STOVE WILL VOID THE WARRANTY AND MAY RESULT IN SERIOUS INJURY AND / OR PROPERTY DAMAGE.**

Should you have any queries concerning the installation or operation of your Mulberry stove, please first check our website, www.mulberrystoves.com , where the FAQ (frequently asked questions) section may answer your query. If you need to contact us, our 'phone, fax and email details are :-

Telephone: 051 897415
Fax 051 897451
email info@mulberrystoves.com

 

| | | |
|---|---|---|
| 1 | CA1003AXX | Back Plate |
| 2 | CA1005AXX | Grate |
| 3 | CA1007AXX | RH Side Plate |
| 4 | CA1006AXX | LH side Plate |
| 5 | SH1024AXX | Hinge x 2 |
| 6 | CA1004AXX | Fire Fence |
| 7 | CA1002AXX | Front |
| 8 | HA1001AXX | Handle |
| 9 | HA1002AXX | 75mm Timber Handle |
| 10 | FI1006AXX | Spring Washer - Handle |
| 11 | FI1005AXX | M8 x 75mm CSK Bolt |
| 12 | CA1001AXX | 3 Slot secondary air casting. |
| 13 | MA1003AXX | Air Slide Knob |
| 14 | FI1001AXX | M8 x 40mm Bolt x 2 |
| 15 | FI1003AXX | 23.5mm long Spring, 1mm wire |
| 16 | GL1001AXX | Glass |
| 17 | IR1001AXX | Glass Sealing Rope |
| 18 | SH1005AXX | Glass Clip Side - Bay Window x 2 |
| 19 | SH1006AXX | Glass Clip - Standard x 4 |
| 20 | FI1007AXX | M5 x 8mm Cross pan head screw x 8 |
| 21 | MA1006AXX | Door catch |
| 22 | FI1017AXX | M6 x 10mm Socket head bolt |

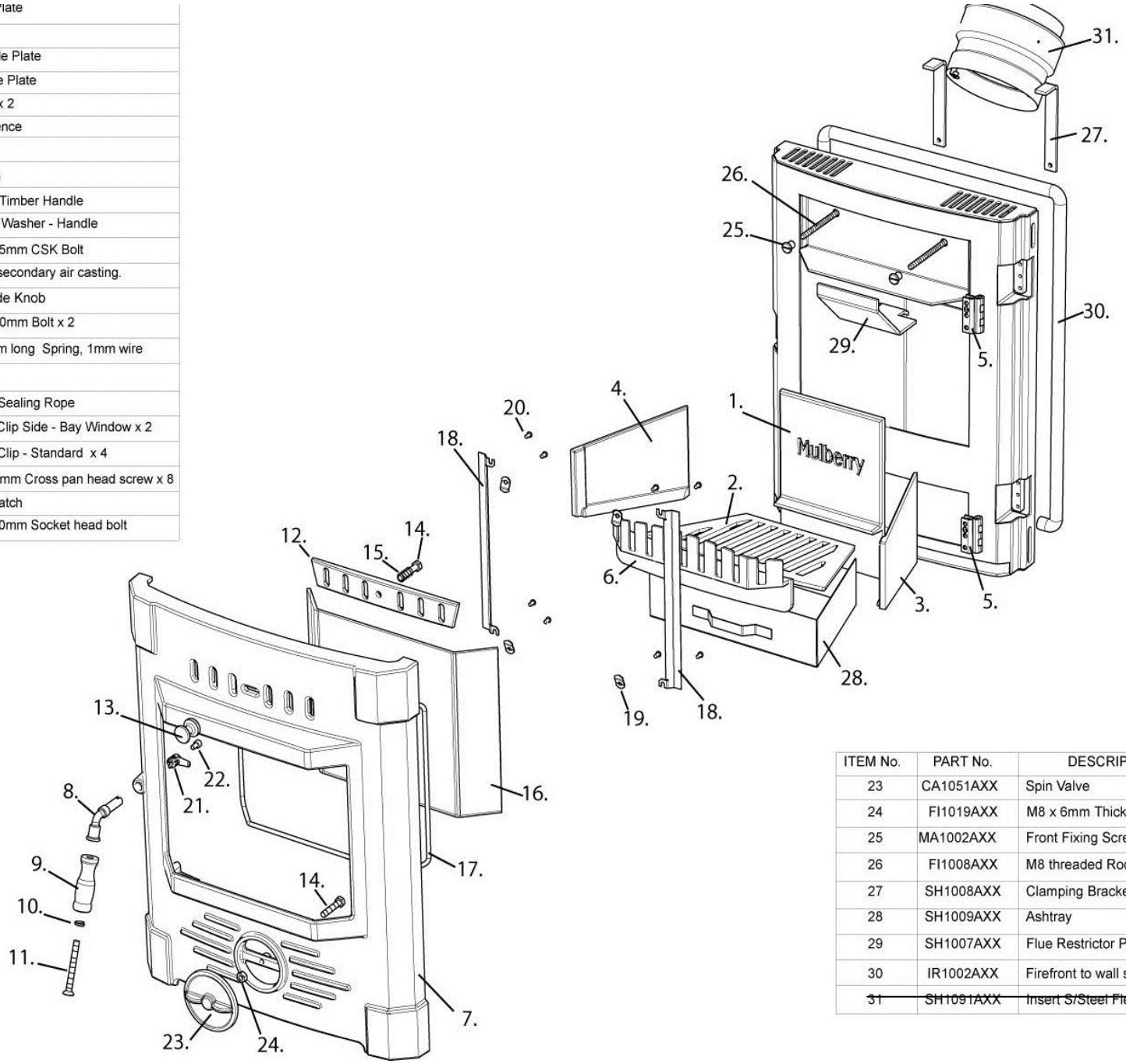


| ITEM No. | PART No. | DESCRIPTION |
|---|---|---|
| 23 | CA1051AXX | Spin Valve |
| 24 | FI1019AXX | M8 x 6mm Thick Nut |
| 25 | MA1002AXX | Front Fixing Screw x 2 |
| 26 | FI1008AXX | M8 threaded Rod - 200mm long x 2 |
| 27 | SH1008AXX | Clamping Bracket x 2 |
| 28 | SH1009AXX | Ashtray |
| 29 | SH1007AXX | Flue Restrictor Plate |
| 30 | IR1002AXX | Firefront to wall seal |
| ~~31~~ | ~~SH1091AXX~~ | ~~Insert S/Steel Flexi Adaptor - Optional~~ |

 

Mulberry™

*Cast a warm eye on life*

# Stoker Performance Data

| Construction Conforms to European Standard **CE** **EN 13229:2001** for 'Inset appliances including open fires fired by solid fuels' | RATED PERFORMANCE – Intermittent burning solid fuel room heater for installation in masonry fireplace with a single dedicated chimney conforming to BS1251 & BS8303. | | |
|---|---|---|---|
| | | Timber | Mineral Fuel* |
| | Mean Flue Temperature | 395 °C | 337 °C |
| | Mean CO in flue (as 13% $O_2$) | 0.15% | 0.26% |
| | Efficiency | 76.2% | 65.95% |
| | Output | 6.5Kw (22,191 BTU) | 5.9Kw (20,150 BTU) |
| | Heat Released to room | 6.5Kw (22,191 BTU) | 5.9Kw (20,150 BTU) |
| | Flue Gas Mass Flow | 7.2 g/s | 4.2 g/s |
| | Minimum Flue Draught | 12 Pa | |
| | Mass of Appliance | 58Kg | |
| * "Mineral fuels" refers to fuels such as Coal, Anthracite etc. | | | |

Quality Irish Stoves, Rathpatrick, Slieverue, Co. Kilkenny, Via Waterford Ireland.
Telephone. +353 (0)51 897415: Fax. +353 (0)51 897451
www.mulberrystoves.com Email. info@mulberrystoves.com
Registered in Ireland Nr. 500276 VAT No. IE 9793511H
*Mulberry Stoves is a registered business name.*

 